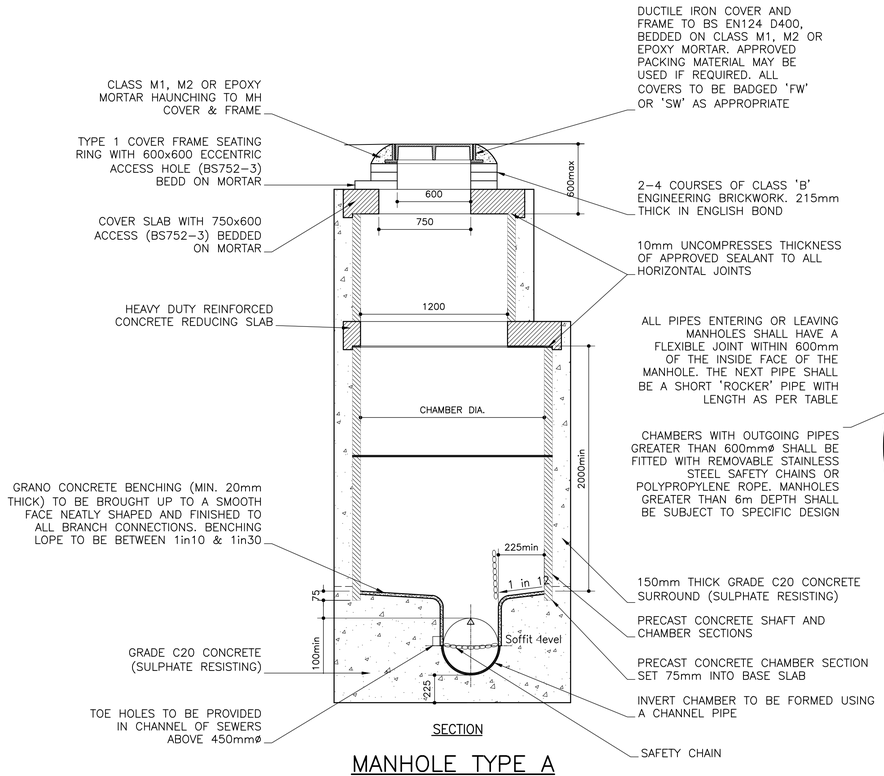

MANHOLE TYPE A

DEPTH FROM GROUND LEVEL TO SOFFIT OF PIPE 3m TO 6m
(Scale NTS)

MANHOLE CHAMBER DIAMETERS

DIA. OF LARGEST PIPE IN MANHOLE (mm)	INTERNAL DIA. OF MANHOLE (mm)
Less than 375	1200
375 – 700	1500
750 – 900	1800

ROCKER PIPES

PIPE DIA. (mm)	ROCKER PIPE LENGTH (mm)
150 to 600	600
675 to 750	1000
825 and over.	1250

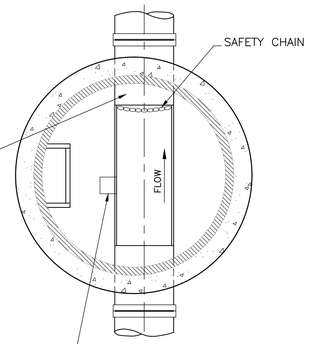

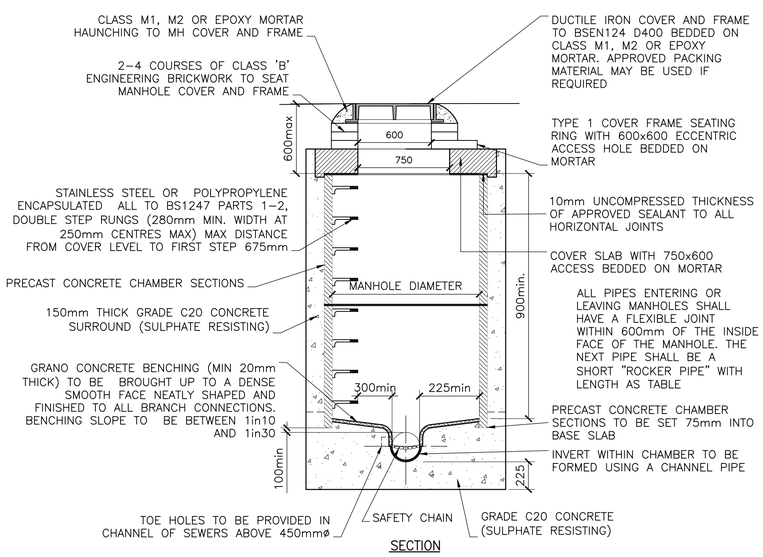

MANHOLE TYPE B

DEPTH FROM GROUND LEVEL TO SOFFIT OF PIPE 3m
(Scale NTS)

MANHOLE DIAMETERS TABLE

DIA. OF LARGEST PIPE IN MANHOLE (mm)	INTERNAL DIA. OF MANHOLE (mm)
Less than 375	1200
375 – 750	1500
750 – 900	1800

ROCKER PIPES

PIPE DIAMETER (mm)	ROCKER PIPE LENGTH (mm)
150 to 600	600
675 to 750	1000
825 and over.	1250

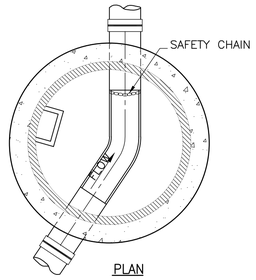

CHAMBERS WITH OUTGOING PIPES GREATER THAN 600mmø SHALL BE FITTED WITH REMOVEABLE STAINLESS STEEL SAFETY CHAINS OR POLYPROPYLENE ROPE.

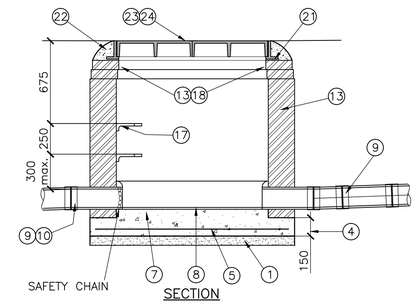

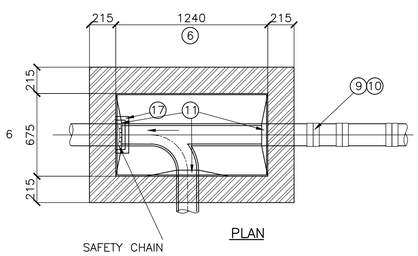

MANHOLE TYPE C

DEPTH FROM GROUND LEVEL TO SOFFIT OF PIPE 1.0m TO 1.45m
(Scale 1:25)

1. 75MM LEAN MIX CONCRETE BLINDING GRADE C7.5 OF BS-EN 206-1.
2. ALL CONCRETE PRODUCTS, INSITU CONCRETE AND MORTARS TO BE PRODUCED/MIXED USING SULPHATE RESISTING CEMENT.
3. INSITU CONCRETE BASES TO BE OF GRADE C20 TO BS-EN 206-1
4. INSITU CONCRETE BASES TO BE 150MM MINIMUM THICKNESS.
5. 1NO. LAYER A393 MESH REINFORCEMENT TO BS 4483:2005.
6. MANHOLE CHAMBER INTERNAL SIZES (LENGTH X WIDTH) SHALL BE:-
1240 X 675MM (COVER AND FRAME TO HAVE CLEAR OPENING OF 1200 X 675MM), BUT WIDTH OF CHAMBER TO BE INCREASED FOR PIPES LARGER THAN 225MM DIA. TO ACCOMMODATE 225MM WIDE BENCHING TO EACH SIDE OF CHANNEL.
7. 50MM THK. MORTAR BED TO HALF ROUND CHANNELS.
8. JUNCTIONS IN MANHOLES TO BE OF PURPOSE MADE HALF ROUND CHANNEL SECTION. MAIN CHANNEL DIAMETER TO MATCH DIA. OF OUTLET PIPE.
9. PIPES ENTERING/EXITING MANHOLES TO HAVE A FLEXIBLE JOINT AS CLOSE AS POSSIBLE TO THE OUTER FACE OF THE BRICK CHAMBER WALLS, FOLLOWED BY A ROCKER PIPE (SEE NOTE 10).
10. A ROCKER PIPE SHALL BE INSTALLED OF LENGTH:-

Pipe Dia. (mm)	Rocker pipe length (mm)
150 to 600	600
675 to 750	1000
825 and over.	1250

11. A PIPE/CHANNEL JOINT WITHIN A MANHOLE SHALL BE LOCATED 100MM MINIMUM FROM THE INSIDE FACE OF THE CHAMBER WALL.
12. ALL PIPES ENTERING/EXITING MANHOLES ARE TO HAVE THEIR SOFFIT LEVELS MATCHING UNLESS SPECIFIED OTHERWISE.
13. 215MM THICK CLASS B ENGINEERING BRICKWORK, IN ENGLISH BOND WITH FROGS UP, INNER FACES PLUMB AND IN TRUE ALIGNMENT. COURSES TO BE LEVEL WITH FLUSH JOINTING TO INNER FACES. BRICKS TO BS-EN 771-1. ALTERNATIVELY PRECAST CONCRETE MASONRY UNITS.
14. INSITU CONCRETE (GRADE C20 TO BS-EN 206-1) TO BE CAST 'UP' TO FORM BENCHING.
15. A BRICK RELIEVING ARCH SHALL BE 'TURNED OVER' ALL PIPES WHERE THEY PASS THROUGH THE CHAMBER WALLS, OR A PRECAST CONCRETE LINTEL OF EQUAL THICKNESS TO WALLS MAY BE BUILT IN OVER PIPES.
16. GRANOLITHIC BENCHING TO RISE VERTICALLY FROM THE EDGE OF THE CHANNEL'S TO A HEIGHT OF NOT LESS 'FULL PIPE' SOFFIT LEVEL AND BE STEEL FLOATED TO A SMOOTH HARD FINISH. THE GRANOLITHIC CONCRETE SHALL BE 20MM MIN. THICKNESS AND A CEMENT MORTAR MIX OF 1:1.
17. STAINLESS STEEL GENERAL PURPOSE LADDER TYPE STEP RUNGS, TO BS-EN 13101:2002, TO BE BUILT INTO WALL OF CHAMBER.
18. REDUCTION FROM CHAMBER WIDTH AND/OR LENGTH TO OPENING WIDTH AND/OR LENGTH MAY BE ACHIEVED BY MEANS OF CORBELLING THE BRICKWORK, SUBJECT TO A MAX. RATE OF 30MM/COURSE.
19. WHERE SUBJECT (OR POSSIBLY SUBJECT) TO VEHICULAR TRAFFIC (INCLUDING FOOTWAYS, VERGES ETC.) USE HEAVY DUTY REINFORCED PRECAST CONCRETE COVER SLABS IN ACCORDANCE WITH BSEN 1916:2002 AND BEDDED ON 10MM THICK MORTAR.
20. INSITU CONCRETE COVER SLABS TO BE OF GRADE C20 TO BS-EN 206-1, 150MM THICK WITH CLEAR OPENINGS TO MATCH COVER AND FRAME. REINFORCEMENT TO BE A393 MESH FOR HEAVY DUTY OR A193 FOR LIGHT DUTY. MESH TO BS 4483:2005.
21. ALL MANHOLE COVERS AND FRAMES TO BE BEDDED ON 10MM (MIN.) THICK MORTAR.
22. MORTAR HAUNCHING TO MANHOLE COVER AND FRAME.
23. MANHOLE COVERS AND FRAMES TO BE LAID TO HAVE TOP SURFACE ALIGNED WITH BOTH THE LONGITUDINAL AND TRANSVERSE GRADIENTS OF SURROUNDING CARRIAGEWAYS, FOOTWAYS AND VERGES, AT OTHER LOCATIONS THEY ARE TO BE LAID LEVEL UNLESS DIRECTED OTHERWISE.
24. MANHOLE COVERS AND FRAMES TO BE AS FOLLOWS, UNLESS DIRECTED OTHERWISE:-
TO BE MARKED SW OR FW AS APPROPRIATE.
A – IN CARRIAGEWAYS, DRIVES FOOTWAYS AND VERGES
MULTIPLE, NON-ROCKING HEAVY DUTY TYPE. (1220 X 675MM CLEAR OPENING).
B – OTHER LOCATIONS (E.G. FIELDS ETC.)
MULTIPLE, RECESSED (CONCRETE FILLED) MEDIUM DUTY TYPE. (1300 X 750MM CLEAR OPENING).
25. BACKFILL MATERIAL TO BE EITHER APPROVED GRANULAR MATERIAL OR LEAN MIX CONCRETE GRADE C7.5 TO BS-EN 206-1. (SEE ALSO NOTE 2).
26. TYPICALLY DEPTH FROM GROUND LEVEL TO SOFFIT LEVEL OF PIPE TO BE 1.0M TO 1.45M

DO NOT SCALE HARD COPIES OF THIS DRAWING OR INTERROGATE CAD VERSIONS. ONLY STATED DIMENSIONS AND COORDINATES ARE TO BE RELIED UPON

COPYRIGHT RESERVED

GENERAL NOTES
1. THIS DRAWING IS TO BE READ IN CONJUNCTION WITH THE ARCHITECTS, SPECIALISTS AND ENGINEERS DRAWINGS AND SPECIFICATIONS. ANY DISCREPANCIES ARE TO BE REPORTED TO THE ARCHITECT/ENGINEER IMMEDIATELY.

TENDER ISSUE

A — LATEST REVISIONS ARE 'TAGGED' WITH THIS INDICATOR. HOWEVER, ALL USERS OF THIS DRAWING MUST SATISFY THEMSELVES OF ALL REVISIONS TO ANY PREVIOUS ISSUES, BY COMPARISON OF THIS DRAWING AGAINST OTHER ISSUES, AS IT CANNOT BE GUARANTEED THAT EVERY ITEM OF REVISION HAS BEEN 'TAGGED'.

Rev	Date	Description	Drawn & Checked	Checked
G				
F				
E				
D				
C				
B				
A				
Revisions				
Date	05.02.16	FIRST ISSUE	DM	SC

Project
LATCHMERE HOUSE

Title
PRIVATE DRAINAGE CONSTRUCTION DETAILS SHEET 2 OF 2

Client
BERKELEY HOMES (WEST LONDON) LIMITED

Architect
BROOKES ARCHITECTS

RLT ENGINEERING CONSULTANTS LTD
CIVIL AND STRUCTURAL CONSULTING ENGINEERS
2 ST PETER'S COURT MIDDLEBOROUGH COLCHESTER, ESSEX, CO1 1WD
T: 01206 768655
F: 01206 768656
E: email@rltengcon.co.uk

QMS ISO 9001 REGISTERED FIRM

Dwg No. 1509/03/08 | Scales: 1:25 @ A1 | Rev: