NOTE: All dimensions shown are indicative, they must be checked on site prior to construction.

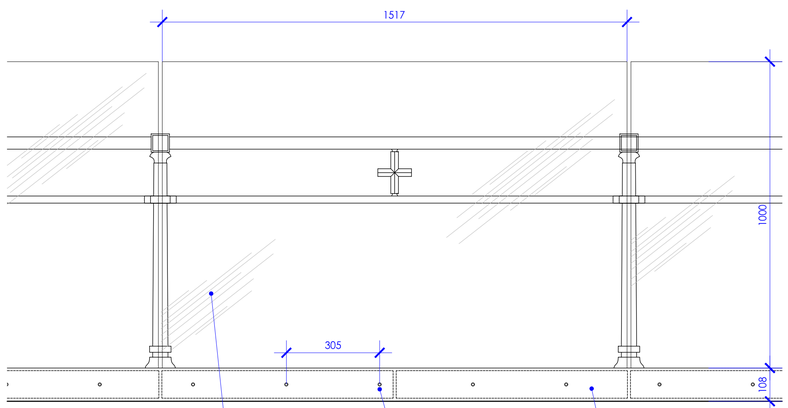

Elevation
scale 1:10

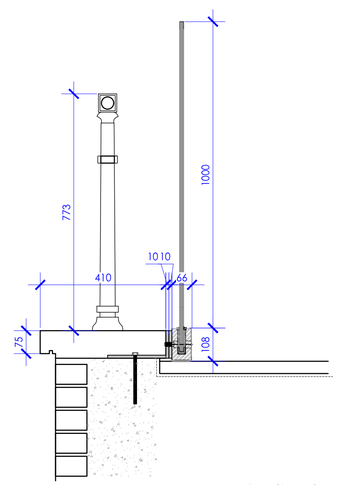

Section A
scale 1:10

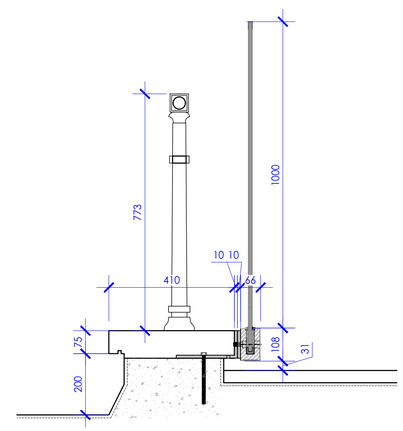

Section B
scale 1:10

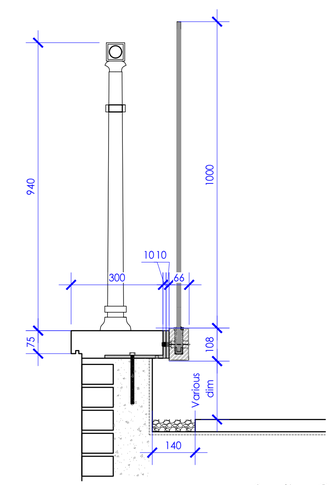

Section C
scale 1:10

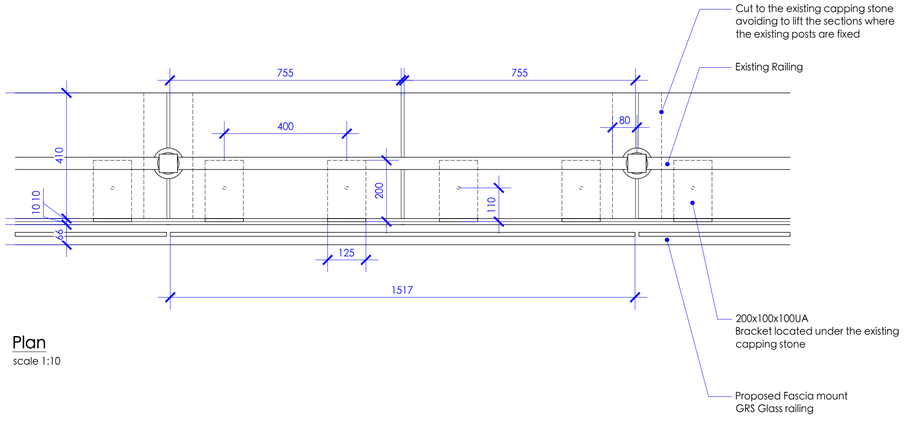

Plan
scale 1:10

Total proposed railing length 38.5 m

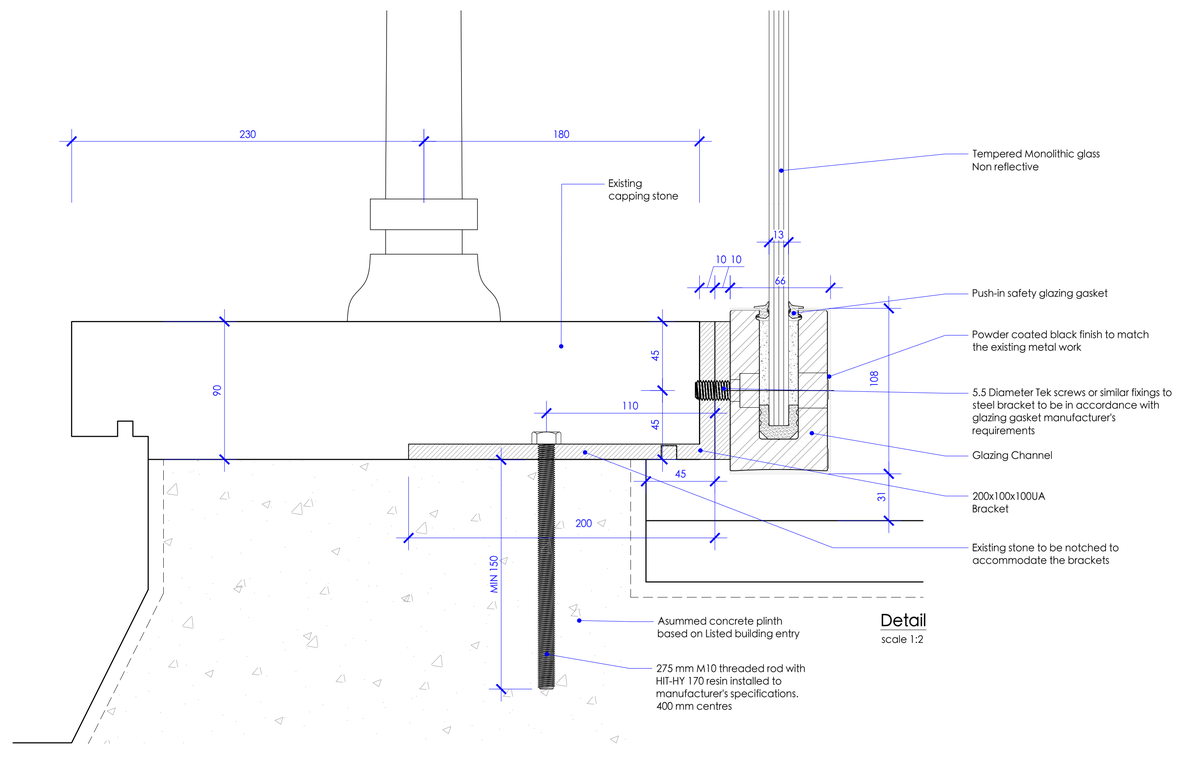

Detail
scale 1:2

0 0.1 0.2 0.4m

X_revision note
revisions

dd/mm/yyyy

MICHAEL JONES ARCHITECTS
020 8948 1863 | 129 Kew Road, Richmond, TW9 2PN
www.mjarchitects.co.uk | studio@mjarchitects.co.uk

job title	1901 St Mary's University, Chapel Railings
client	St.Mary's University, Twickenham
drawing title	Proposed Typical Railing
drawing number	1901.03.03.Pln.200
rev	A
scale	1:10@A1
date	July 2022
drawn by	XD
checked by	AB