The Morton Partnership
Structural Engineers

JOB No: 23117
JOB Title: 5 Sion RoadTwickenham-
REF: Floor joists strengthening
Rev. -

DATE: 09/08/2024 **CH'k:** AF

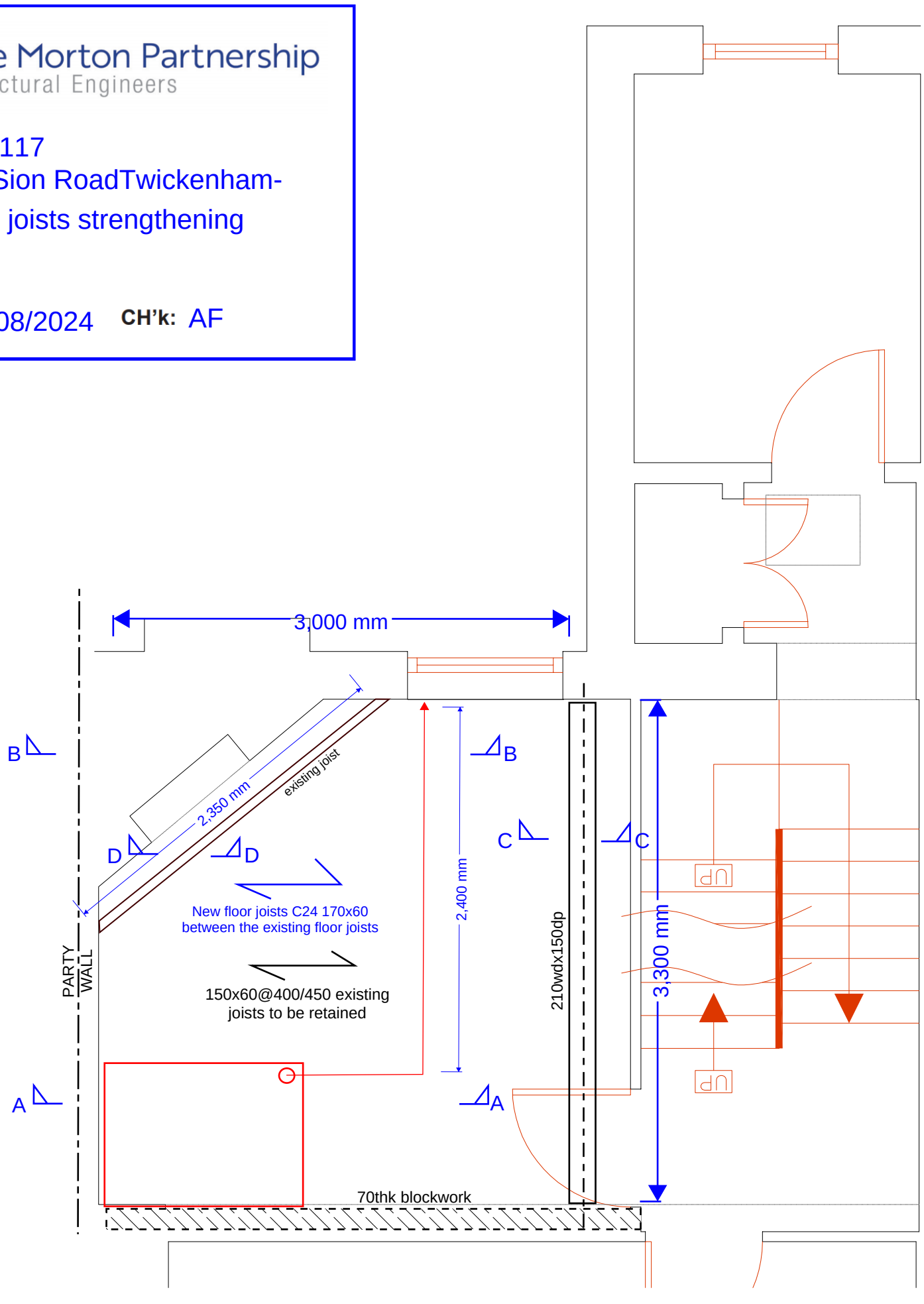

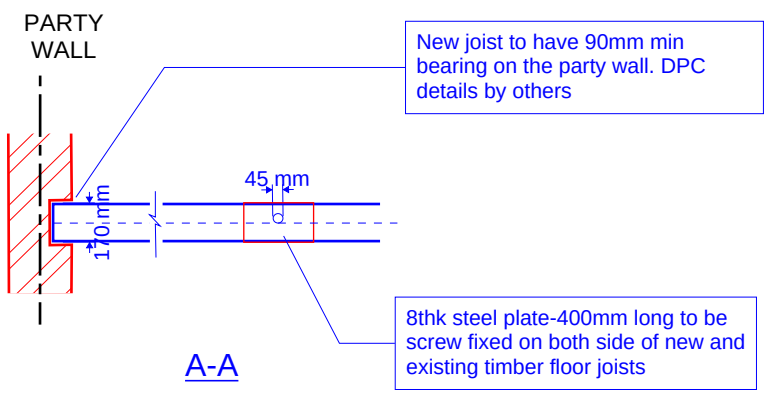

A-A

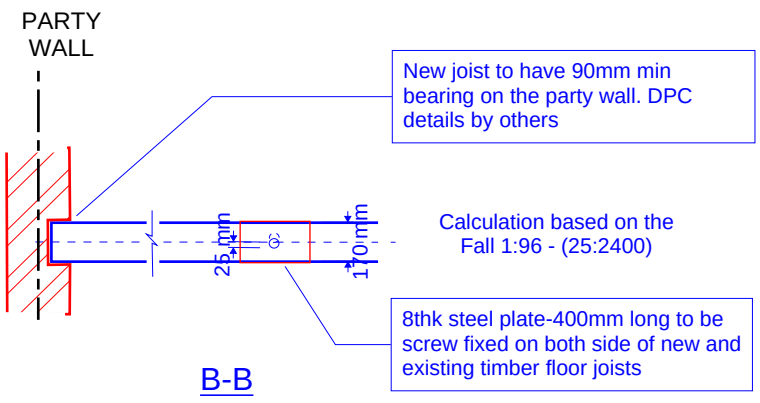

B-B

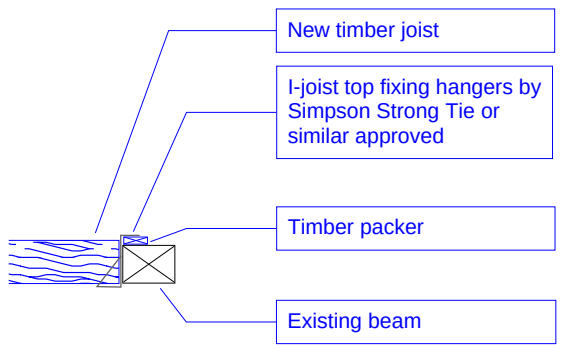

C-C

D-D