NOT FOR CONSTRUCTION

BLOCKWORK / IN-SITU CONCRETE MANHOLE DETAILS

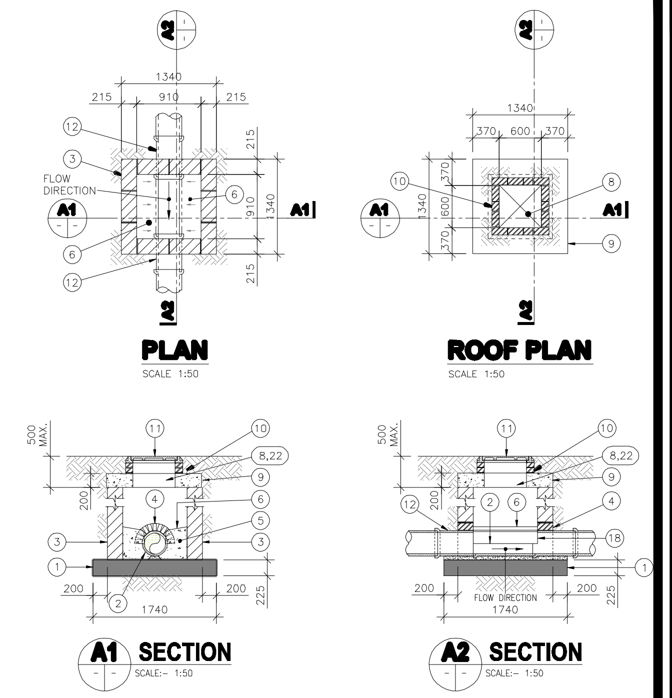

PLAN SCALE 1:50 — **ROOF PLAN** SCALE 1:50 — **A1 SECTION** SCALE:– 1:50 — **A2 SECTION** SCALE:– 1:50

MANHOLE TYPE A
DEPTH TO INVERT < 1m

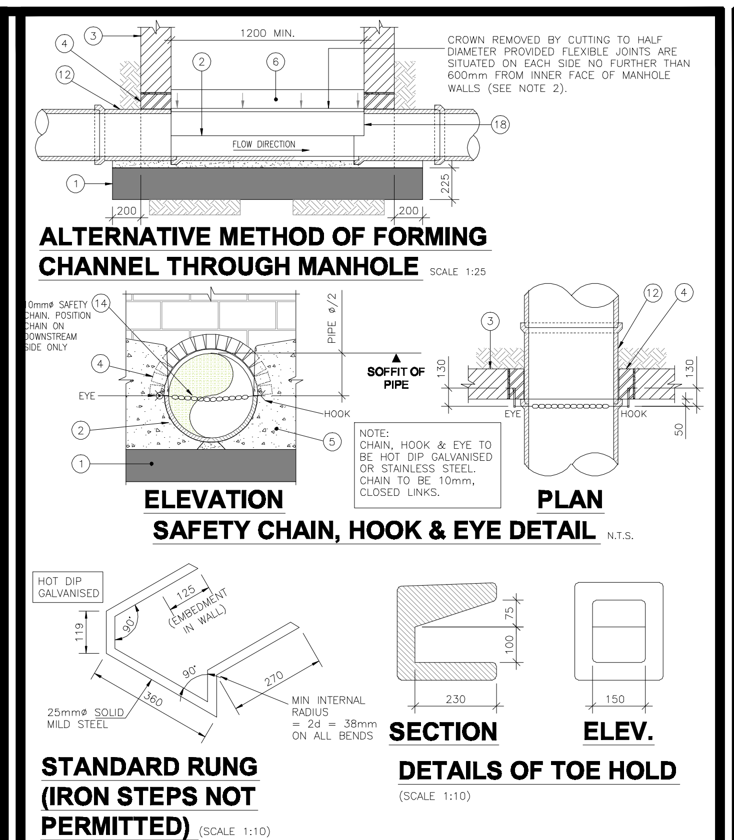

ALTERNATIVE METHOD OF FORMING CHANNEL THROUGH MANHOLE SCALE 1:25

ELEVATION — **PLAN**
SAFETY CHAIN, HOOK & EYE DETAIL N.T.S.

STANDARD RUNG (IRON STEPS NOT PERMITTED) (SCALE 1:10)

SECTION — **ELEV.** **DETAILS OF TOE HOLD** (SCALE 1:10)

MISCELANEOUS MANHOLE DETAILS

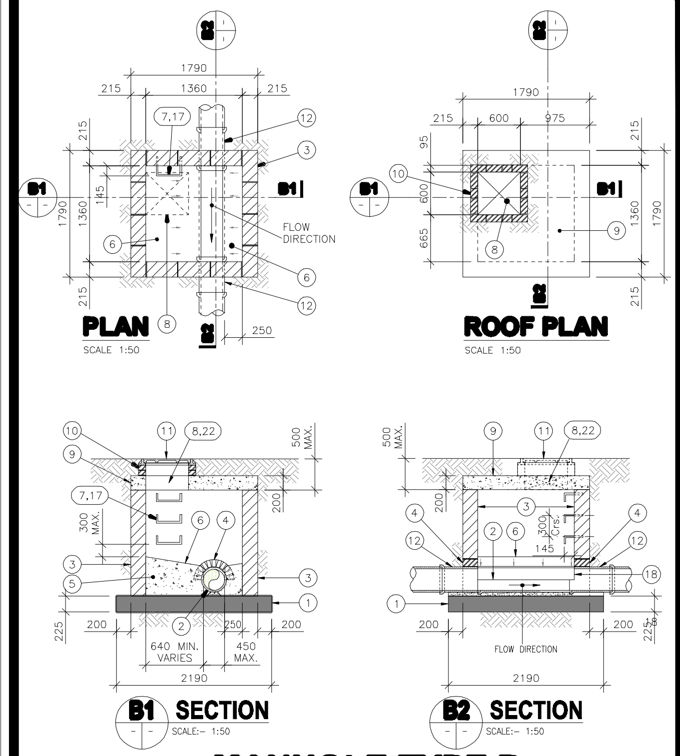

PLAN SCALE 1:50 — **ROOF PLAN** SCALE 1:50 — **B1 SECTION** SCALE:– 1:50 — **B2 SECTION** SCALE:– 1:50

MANHOLE TYPE B
1m ≤ DEPTH TO INVERT < 3m

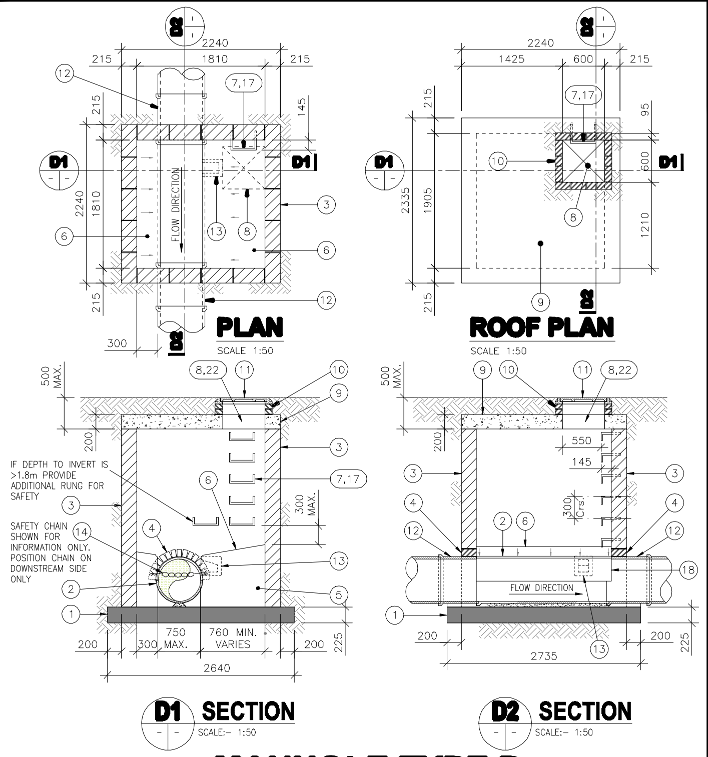

PLAN SCALE 1:50 — **ROOF PLAN** SCALE 1:50 — **D1 SECTION** SCALE:– 1:50 — **D2 SECTION** SCALE:– 1:50

MANHOLE TYPE D
1m ≤ DEPTH TO INVERT < 3m

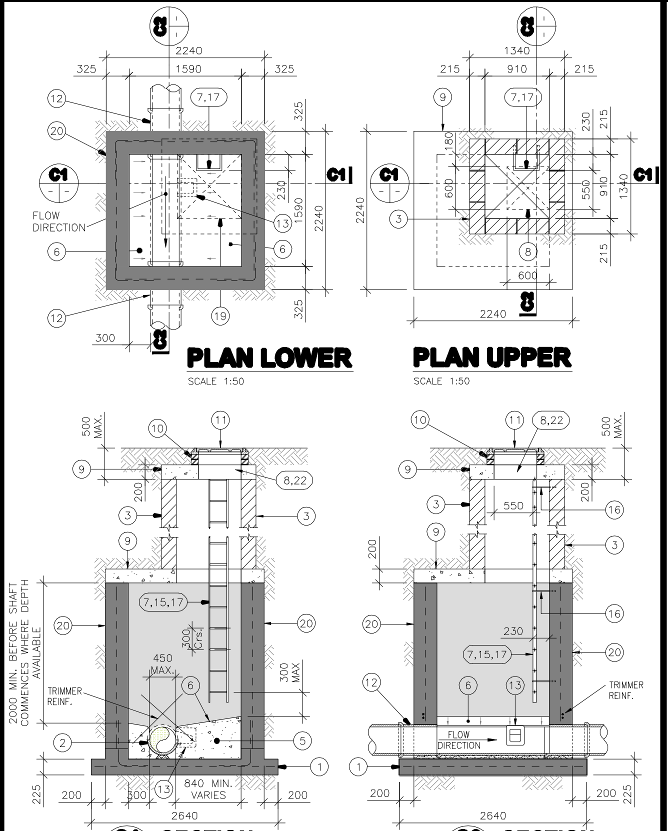

PLAN LOWER SCALE 1:50 — **PLAN UPPER** SCALE 1:50 — **C1 SECTION** SCALE:– 1:50 — **C2 SECTION** SCALE:– 1:50

MANHOLE TYPE C
3m ≤ DEPTH TO INVERT < 6m

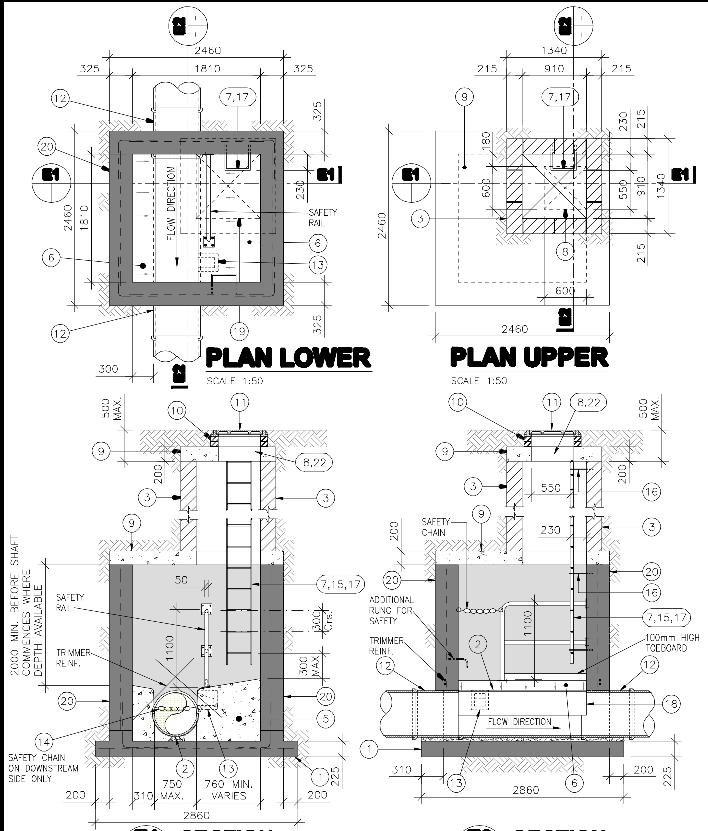

PLAN LOWER SCALE 1:50 — **PLAN UPPER** SCALE 1:50 — **E1 SECTION** SCALE:– 1:50 — **E2 SECTION** SCALE:– 1:50

MANHOLE TYPE E
3m ≤ DEPTH TO INVERT < 6m

FOR PIPE DIAMETERS 150, 225, 300, 375 & 450mm MANHOLES TYPE A, B, & C.

FOR PIPE DIAMETERS 525, 600, 675, & 750mm MANHOLES TYPE D, & E.

RAMP / BACKDROP / INTERCEPTOR TRAP DETAILS

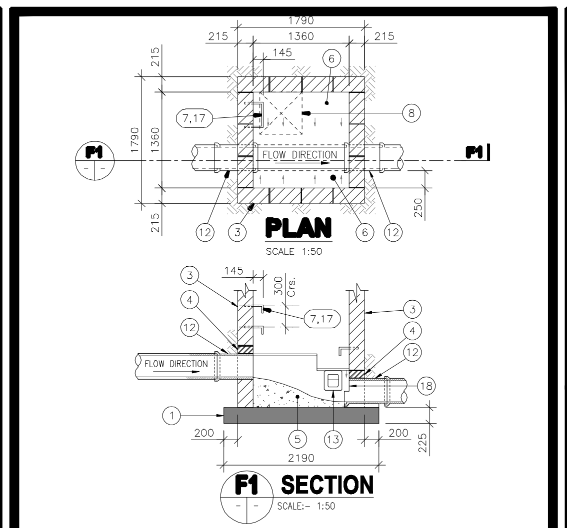

PLAN SCALE 1:50 — **F1 SECTION** SCALE:– 1:50

TABLE F

INLET ø mm A	DEPTH (max) mm H
225	600
300	600
375	750
450	750
525	750
600	750
750	750

WHEN THE DROP 'H' IS GREATER THAN THE MAX VALUE SHOWN USE BACKDROP MANHOLE

MANHOLE TYPE F RAMP MANHOLE

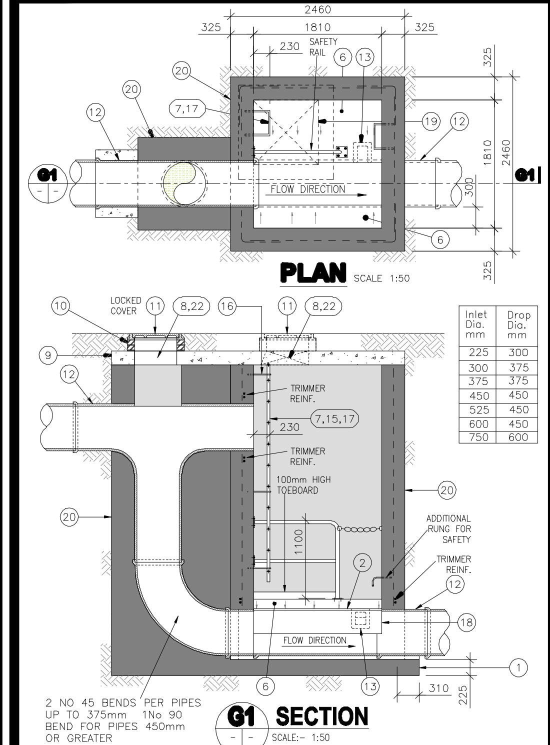

PLAN SCALE 1:50 — **G1 SECTION** SCALE:– 1:50

Inlet Dia. mm	Drop Dia. mm
225	300
300	375
375	375
450	450
525	450
600	450
750	600

MANHOLE TYPE G BACKDROP MANHOLE FOR ALL PIPE DIAMETERS
DROP > 600 FOR 225 & 300 PIPE DIAMETERS
DROP > 750 FOR GREATER PIPE DIAMETERS

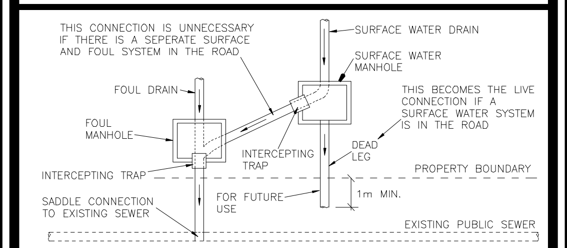

PLAN OF SEPARATE CONNECTION TO COMBINED SEWER N.T.S.

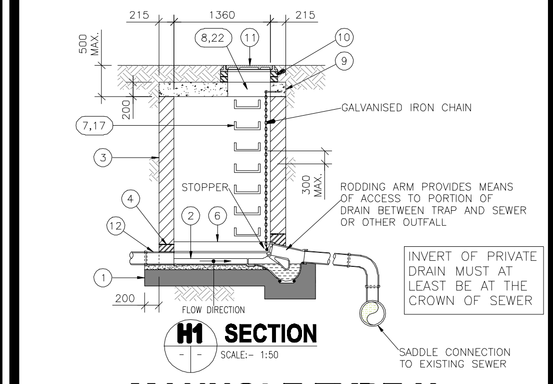

H1 SECTION SCALE:– 1:50

MANHOLE TYPE H INTERCEPTOR TRAP DETAILS
FOR OUTFALL MANHOLES AT SITE BOUNDARY PRIOR TO CONNECTING TO PUBLIC SYSTEM

PRECAST CONCRETE MANHOLE DETAILS

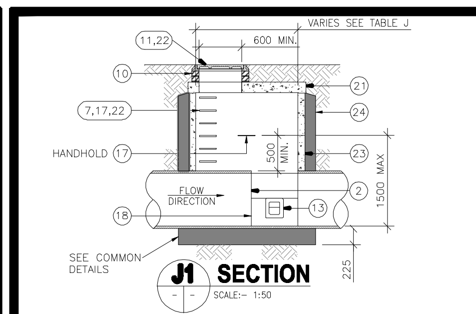

J1 SECTION SCALE:– 1:50

TABLE J

MAXIMUM PIPE DIAMETER A	CHAMBER INTERNAL DIAMETER B
225	1200
300	1200
375	1200
525	1200
600	1200
675	1350
750	1500
900	1500
1050	2100
1200	2100

MANHOLE TYPE J
1m < DEPTH TO CROWN < 3m

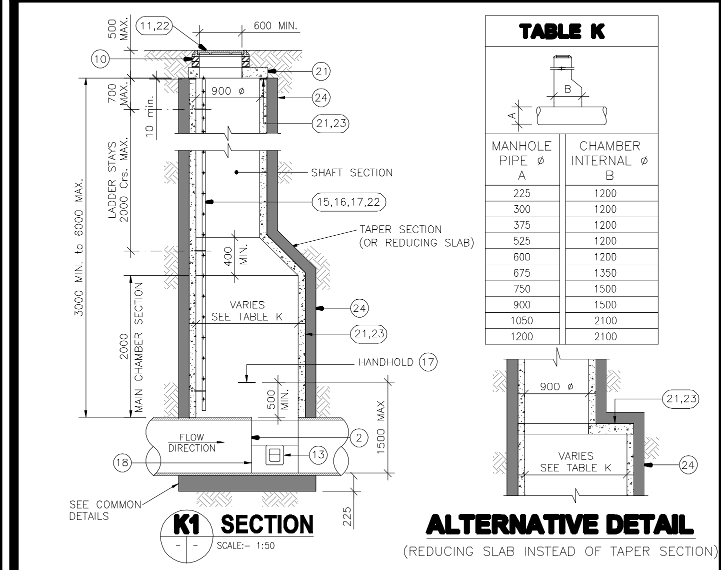

K1 SECTION SCALE:– 1:50

TABLE K

MANHOLE PIPE ø A	CHAMBER INTERNAL ø B
225	1200
300	1200
375	1200
525	1200
600	1200
675	1350
750	1500
900	1500
1050	2100
1200	2100

ALTERNATIVE DETAIL (REDUCING SLAB INSTEAD OF TAPER SECTION)

MANHOLE TYPE K
3m ≤ DEPTH TO INVERT < 6m

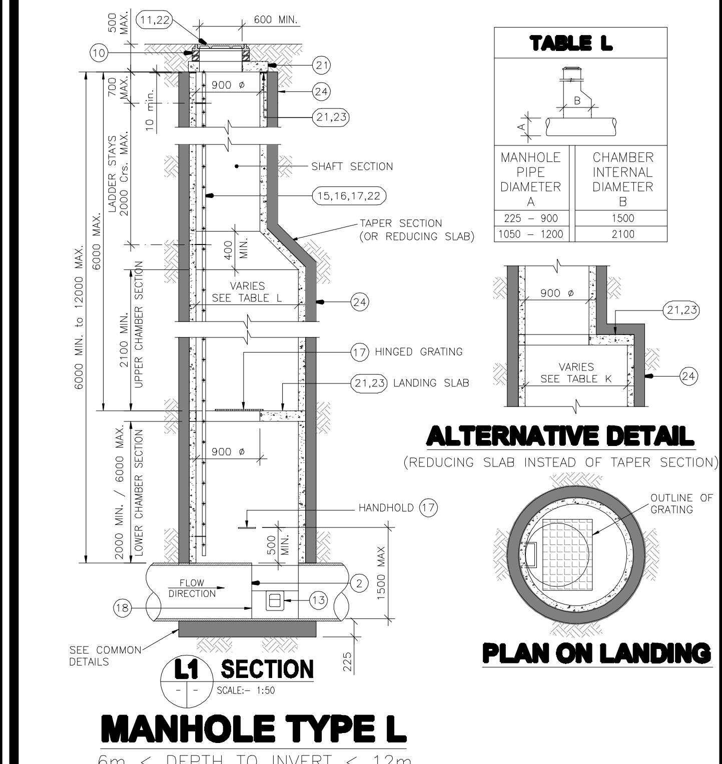

L1 SECTION SCALE:– 1:50

TABLE L

MANHOLE PIPE DIAMETER A	CHAMBER INTERNAL DIAMETER B
225 – 900	1500
1050 – 1200	2100

ALTERNATIVE DETAIL (REDUCING SLAB INSTEAD OF TAPER SECTION)

PLAN ON LANDING

MANHOLE TYPE L
6m < DEPTH TO INVERT < 12m

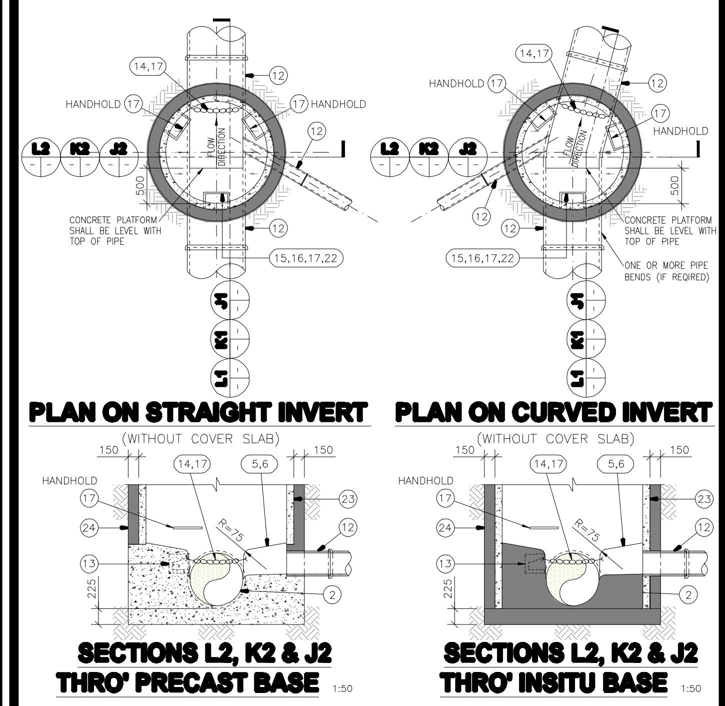

PLAN ON STRAIGHT INVERT (WITHOUT COVER SLAB) — **PLAN ON CURVED INVERT** (WITHOUT COVER SLAB)

SECTIONS L2, K2 & J2 THRO' PRECAST BASE 1:50 — **SECTIONS L2, K2 & J2 THRO' INSITU BASE** 1:50

COMMON DETAILS

NOTE: PRECAST CONCRETE MANHOLES ARE NOT ALLOWED IN DUBLIN CITY COUNCIL AREAS

PIPE BEDDING DETAILS

DETAILS M, N, P, Q, R & S

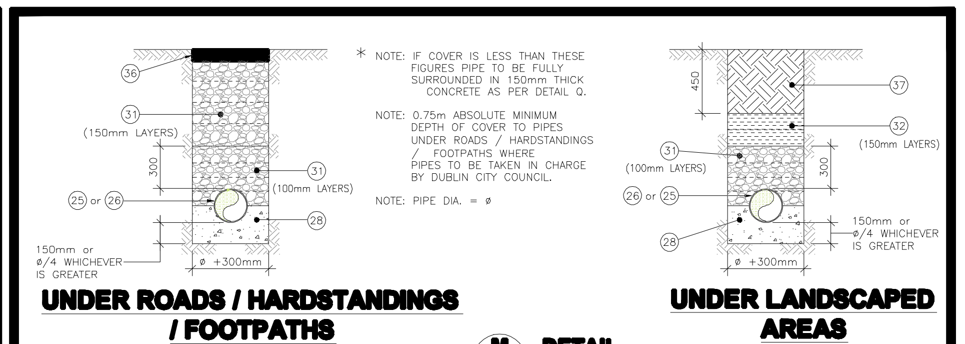

UNDER ROADS / HARDSTANDINGS / FOOTPATHS COVER ≥ 1.2m * — **UNDER LANDSCAPED AREAS** COVER ≥ 0.9m * — **M DETAIL** SCALE:– 1:25

RIGID PIPES WITH CONCRETE BED & SURROUND

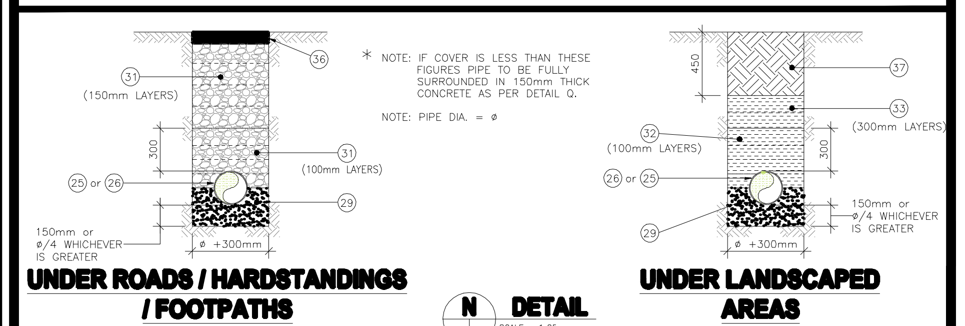

UNDER ROADS / HARDSTANDINGS / FOOTPATHS COVER ≥ 1.2m * — **UNDER LANDSCAPED AREAS** COVER ≥ 0.9m * — **N DETAIL** SCALE:– 1:25

RIGID PIPES WITH GRANULAR BED

NOTE: GRANULAR BED NOT ALLOWED IN DUBLIN CITY COUNCIL AREAS

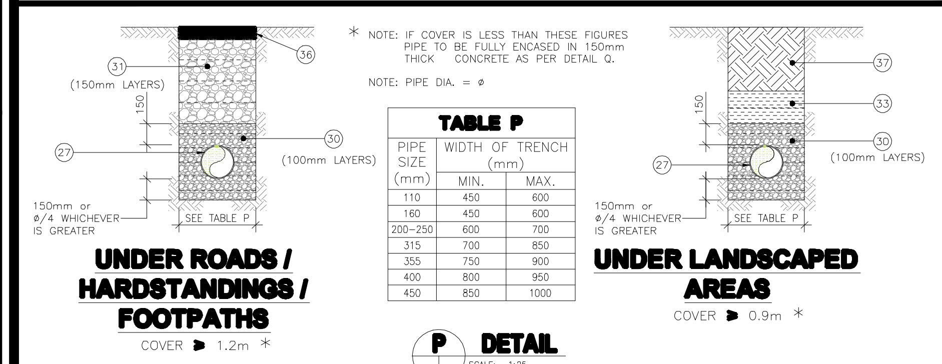

TABLE P

PIPE SIZE (mm)	WIDTH OF TRENCH (mm) MIN.	MAX.
110	450	600
160	450	600
200–250	600	700
315	700	850
355	750	900
400	800	950
450	850	1000

UNDER ROADS / HARDSTANDINGS / FOOTPATHS COVER ≥ 1.2m * — **UNDER LANDSCAPED AREAS** COVER ≥ 0.9m * — **P DETAIL** SCALE:– 1:25

UPVC PIPES WITH GRANULAR BED & SURROUND

NOTE: UPVC PIPES NOT ALLOWED IN DUBLIN CITY COUNCIL AREAS

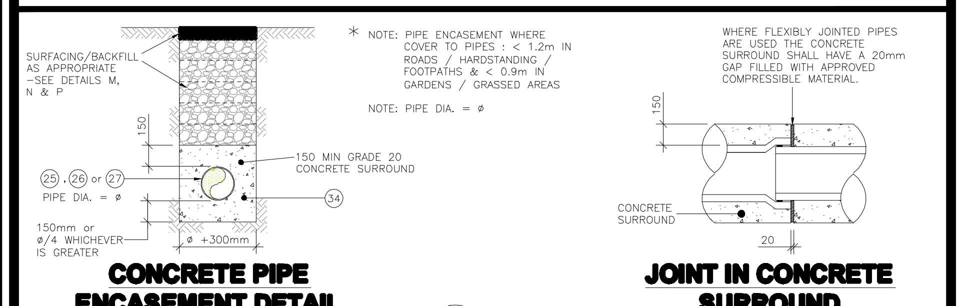

CONCRETE PIPE ENCASEMENT DETAIL — **JOINT IN CONCRETE SURROUND** — **Q DETAIL** SCALE:– 1:25

CONCRETE ENCASEMENT

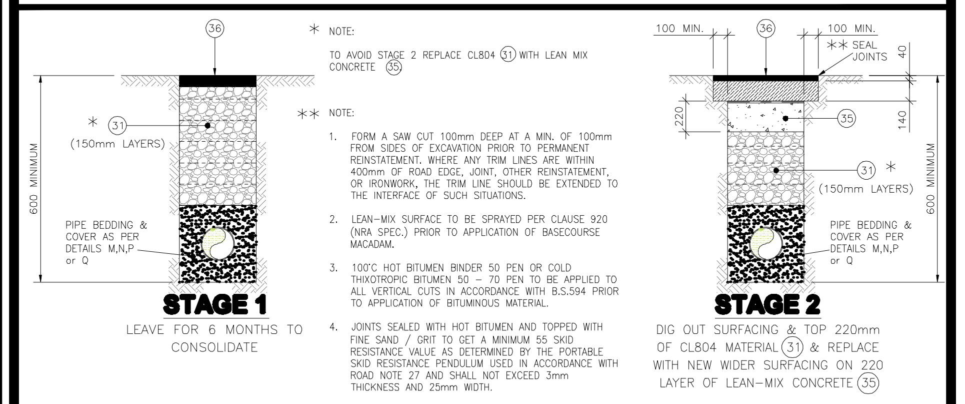

STAGE 1 LEAVE FOR 6 MONTHS TO CONSOLIDATE

STAGE 2 DIG OUT SURFACING & TOP 220mm OF CL804 MATERIAL (31) & REPLACE WITH NEW WIDER SURFACING ON 220 LAYER OF LEAN-MIX CONCRETE (35)

R DETAIL SCALE:– 1:25

REINSTATEMENT OF PIPE TRENCH IN EXISTING ROAD

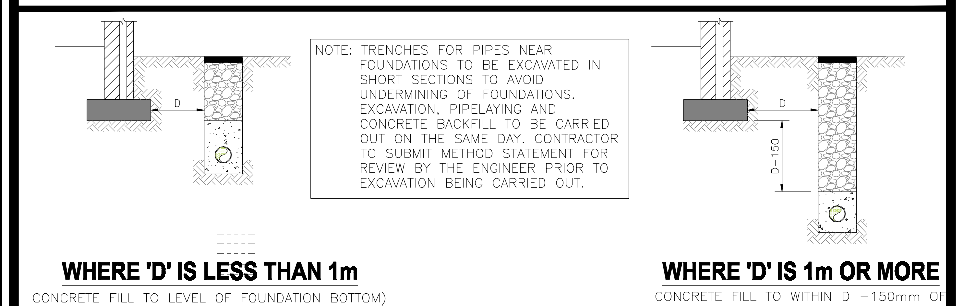

WHERE 'D' IS LESS THAN 1m (CONCRETE FILL TO LEVEL OF FOUNDATION BOTTOM)

WHERE 'D' IS 1m OR MORE CONCRETE FILL TO WITHIN D –150mm OF LEVEL OF FOUNDATION BOTTOM

S DETAIL SCALE:– 1:25

CONCRETE PIPE LAID NEAR FOUNDATIONS

NOTES

1) 225mm THICK CL. 20N/20mm MASS CONCRETE FOUNDATIONS.

2) PREFORMED HALF CIRCLE CHANNEL PIPES. THE PIPELINE MAY, WHERE PRACTICABLE, BE LAID THROUGH THE MANHOLE AND THE CROWN CUT OUT TO HALF DIAMETER, PROVIDED FLEXIBLE JOINTS ARE SITUATED ON EACH SIDE NO FURTHER THAN 600mm FROM THE INNER FACE OF MANHOLE WALL.
NOTE: WHERE PIPE DIAMETER CHANGES AT A MANHOLE PIPE CROWNS TO LINE UP

3) MANHOLE CONSTRUCTION:
a. FOR SURFACE WATER MANHOLES HIGH-DENSITY BLOCKS TO CL. S10 (10N STRENGTH PINK COLOUR) OF I.S.20 PART 1:1987 OR CL. 30N/20mm INSITU CONCRETE.
b. BLOCK WORK SHALL BE BEDDED AND JOINTED USING MORTAR TO I.S.406. BEDS AND VERTICAL JOINTS SHALL BE COMPLETELY FILLED WITH MORTAR AS THE BLOCKS ARE LAID.
c. JOINTS SHALL BE FLUSH POINTED AS THE WORK PROCEEDS.
d. ALL FOUL MANHOLES MUST BE FACED IN SOLID ENGINEERING BRICK (MIN. CLASS 'A' OR 'B'), OR INSITU CONCRETE FOR 1m ABOVE BENCHING LEVEL. –BRICK TO BE BONDED TO BLOCK WORK USING ENGLISH GARDEN WALL BOND.

4) RELIEVING ARCH FORMED BY 215 x 103 x 65 SOLID ENGINEERING BRICK CLASS 'A' OR 'B'. RELIEVING ARCHES USED IN BRICK OR BLOCK WORK MANHOLES EXTEND OVER FULL THICKNESS OF WALL. A DOUBLE ARCH IS TO BE FORMED FOR PIPE DIAMETERS GREATER THAN 600mm.

5) BENCHING AND PIPE CHANNEL PIPE SURROUND – CL. 20/20 CONCRETE

6) BENCHING FINISHED IN 2:1 SAND–CEMENT MORTAR WITH A SMOOTH TROWEL FINISH, AT 1 IN 30 SLOPE TOWARDS CHANNEL.

7) STANDARD RUNGS AT 300 C/C VERTICALLY AND GALVANISED TO THE LATEST VERSION OF B.S. 729 OR EQUIVALENT. NOTE: STEP IRONS ARE NOT ACCEPTABLE.

8) 600mm SQUARE OPE IN ROOF SLAB.

9) PRECAST R.C. ROOF SLAB SHALL BE 200mm THICK IN CLASS 30N/20mm, WITH 40mm COVER TO STEEL. DESIGNED TO BS 8100 TO TAKE FULL TRAFFIC LOADING.

10) 1 TO 2 COURSES OF SOLID ENGINEERING BRICKS CL. 'B' TO I.S.91:1983 SET IN 1:3 (CEMENT AND MORTAR)

11) CLASS D400 OR E600 MANHOLE COVER AND FRAME TO I.S./EN124. 150mm DEEP FRAME FOR ROADS AND 100mm DEEP FOR FOOTPATHS AND GREEN AREAS. NON-ROCK DESIGN, CLOSED KEYWAYS, MANUFACTURED FROM SPHERICAL GRAPHITE CAST IRON (DUCTILE CAST IRON), 600 x 600 (600ø) CLEAR OPENING, COVER AND FRAME COATED IN BITUMEN OR OTHER APPROVED MATERIAL,COVER TO HAVE A MINIMUM MASS OF 140kg/m2, FRAME BEARING AREA SHALL BE 80,000mm² MIN., FRAMES SHALL BE DESIGNED TO PREVENT COVERS FALLING INTO MANHOLE. FRAMES SHALL BE BEDDED ON APPROVED MORTAR TO MANUFACTURERS INSTRUCTIONS.

12) SHORT LENGTH PIPE AND PIPE JOINT EXTERNAL TO MANHOLE SHALL NOT EXCEED 600mm FROM THE INNER FACE OF MANHOLE WALL.

13) TOE HOLES OF 230mm MINIMUM DEPTH AND GALVANISED STEEL SAFETY RAILINGS TO BE PROVIDED IN BENCHING OF SEWERS GREATER THAN 525mmø AND DEPTH TO INVERT >3m FOR ACCESS TO INVERT.

14) A SAFETY CHAIN IS TO BE PROVIDED ON PIPES THAT EXCEED 450mm IN DIAMETER. MILD STEEL SAFETY CHAIN SHALL BE 10mm NOMINAL SIZE GRADE M(H) NON–CALIBRATED CHAIN, TYPE 1, COMPLYING WITH B.S.4942 PART 2 OR EQUIVALENT

15) WHEN DEPTH OF MANHOLES TO INVERT IS GREATER THAN 3.0m LADDERS SHALL BE USED, INSTEAD OF RUNGS TO B.S.4211 OR EQUIVALENT EXCEPT THAT STRINGERS SHOULD BE NOT LESS THAN 65 x 12mm IN SECTION AND RUNGS 25mm IN DIAMETER. FIXED LADDERS SHOULD MEET THE DIMENSIONAL REQUIREMENTS OF B.S.4211 OR EQUIVALENT. DISTANCE FROM THE TOP RUNG OF THE LADDER TO GROUND LEVEL SHOULD NOT EXCEED 500mm.

16) LADDER STRINGERS SHOULD BE ADEQUATELY SUPPORTED FROM THE MANHOLE WALL AT INTERVALS OF NOT MORE THAN 2.0m, STRINGERS SHOULD BE BOLTED TO CLEATS TO FACILITATE RENEWAL.

17) ALL LADDERS, RUNGS, HANDRAILS, SAFETY CHAINS ETC. SHALL BE HOT DIP GALVANISED TO B.S.729 OR EQUIVALENT.

18) PIPE SHOULD BE CUT FLUSH WITH THE INSIDE SURFACE OF THE MANHOLE WALL SO THAT THE CHANNEL EXTENDS THE FULL LENGTH OF THE MANHOLE (EXCEPT FOR PRECAST MANHOLES).

19) POSITION OF 910 SQUARE OPE IN INTERMEDIATE ROOF SLAB.
a. ALL MANHOLES SHALL BE WATERTIGHT TO THE SATISFACTION OF THE ENGINEER.
b. FORMWORK TO REINFORCED CONCRETE AND MASS CONCRETE SHALL COMPLY WITH CLASS 2, SECTION 6.2.7, B.S.8110:PART 1:1997
c. FINISH TO THE TOP OF SLABS SHALL COMPLY WITH TYPE 'A', SECTION 6.2.7, B.S.8110:PART 1:1997
d. PLAN DIMENSIONS OF MANHOLES ARE BASED ON BLOCK WORK HAVING A CO-ORDINATING SIZE OF 450 x 225 x 100. FOR PIPE DIAMETER >750mm USE MANHOLE WITH INTERNAL DIAMETER SIZE=PIPE SIZE +1m +300mm
e. MANHOLES ARE DESIGNED TO B.S.8005 AND WALL THICKNESS TO I.S.325 BLOCK WORK DESIGN CODE TAKING GRANULAR FILL PRESSURE AND H.B. SURCHARGE.
f. REINFORCEMENT TO SLABS TO ENGINEERS DETAILS.

20) FOR MANHOLES >3m DEPTH TO INVERT USE 30N/20mm INSITU CONCRETE. REINFORCING MESH REF.. A393 TO BE FIXED AT MID POINT OF WALL. ADDITIONAL REINFORCEMENT TO BE SUPPLIED OVER PIPE CROWN.

21) PRECAST MANHOLES, CHAMBER WALLS AND COVER SLAB TO BE CONSTRUCTED TO I.S. EN 1917 AND I.S.420:2004

22) MANHOLE OPENINGS TO BE SITUATED FURTHEST FROM THE NEAREST CARRIAGEWAY. MANHOLE STEPS-ACCESS TO BE POSITIONED TO ALLOW VIEWING OF ONCOMING TRAFFIC.

23) FOR BEDDING AND SEALING OF CHAMBER RINGS, THE TOP RING (TO PRECAST COVER SLAB) AND BOTTOM RING TO BE BEDDED WITH CEMENT MORTAR. FOR INTERMEDIATE RINGS, JOINTS TO BE SEALED WITH APPROVED PRE-FORMED JOINTING STRIP.

24) PRECAST MANHOLES TO BE SURROUNDED WITH A MINIMUM OF 150mm THICK GRADE C20/40 CONCRETE.

25) CONCRETE SEWER PIPES WITH SPIGOT AND SOCKET JOINTS AND RUBBER RING FITTINGS TO COMPLY WITH IS/EN 1916 AND IS 6 2004 OR EQUIVALENT STANDARD CLASS M OR CLASS H.

26) VITRIFIED CLAY PIPES AND FITTINGS COMPLYING WITH THE REQUIREMENTS OF IS/EN 295-1/2/3: 1992 OR EQUIVALENT STANDARD CLASS 160 OR CLASS 200.

27) UNPLASTICIZED POLYVINYLCHLORIDE (UPVC) PIPES AND FITTINGS IN ACCORDANCE WITH THE REQUIREMENTS OF IS 424.

28) CONCRETE BED AND SURROUND TO BE A MINIMUM 150mm THICK IN-SITU CONCRETE CLASS 20N/20mm AND HAUNCHED HALF WAY UP THE BARREL OF THE PIPE.

29) GRANULAR BED AND SURROUND FOR RIGID PIPES TO BE EITHER:
A. 14mm TO 5mm GRADED AGGREGATE OR
B. 10mm SINGLE SIZED AGGREGATE.
ALL COMPLYING WITH THE REQUIREMENTS OF IS 5: PART 1: 1990, TABLE 7 AND SHOULD HAVE A COMPACTION FACTOR VALUE NOT GREATER THAN 0.2 WHEN MEASURED IN ACCORDANCE WITH BS 8301: 1985, APPENDIX D.

30) GRANULAR BED AND SURROUND AND COVER FOR UPVC TO BE:
(A) 14mm TO 5mm GRADED AGGREGATE (PIPE DIAMETER ≥ 315mm)
(B) 10mm SINGLE SIZED AGGREGATE (PIPE DIAMETER < 315mm)
ALL COMPLYING WITH THE REQUIREMENTS OF IS 5: PART 1: 1990, TABLE 7 AND SHOULD HAVE A COMPACTION FACTOR VALUE NOT GREATER THAN 0.2 WHEN MEASURED IN ACCORDANCE WITH BS 8301: 1985, APPENDIX D. GRANULAR SIDE FILL AND COVER TO BE PLACED UNIFORMLY ON EITHER SIDE OF THE PIPE IN LAYERS NOT EXCEEDING 100mm, EACH LAYER BEING COMPACTED BY HAND TAMPING UNTIL THE PIPE HAS A MINIMUM 150mm COMPACTED COVER.

31) GRANULAR BACKFILL MATERIAL SHALL BE IN COMPLIANCE WITH CLAUSE 804 (GRANULAR MATERIAL TYPE B) OF THE NRA SPECIFICATION FOR ROAD WORKS. GRANULAR BACKFILL SHOULD BE PLACED UNIFORMLY ON EITHER SIDE OF THE PIPE IN LAYERS NOT EXCEEDING 100mm, EACH LAYER BEING COMPACTED BY HAND TAMPING UNTIL THE PIPE HAS MINIMUM OF 300mm COMPACTED COVER. CARE SHOULD BE TAKEN THAT THE PROCESS OF COMPACTION DOES NOT DISPLACE THE PIPE FROM ITS CORRECT LINE AND LEVEL. SUBSEQUENT LAYERS OF GRANULAR FILL TO BE WELL COMPACTED IN 150mm THICK LAYERS TO THE LOCAL AUTHORITY ROAD DIVISION SPECIFICATION. MECHANICAL COMPACTION EQUIPMENT SHOULD NOT BE USED UNTIL THERE IS A MINIMUM OF 450mm COMPACTED COVER OVER THE CROWN OF THE PIPE.

32) SELECTED FILL SHOULD BE FREE FROM STONES LARGER THAN 37mm, LUMPS OF CLAY OVER 75mm, TIMBER, FROZEN MATERIAL AND VEGETABLE OR FOREIGN MATTER. SELECTED FILL SHOULD BE PLACED UNIFORMLY ON EITHER SIDE OF THE PIPE IN LAYERS NOT EXCEEDING 100mm, EACH LAYER BEING COMPACTED BY HAND TAMPING UNTIL THE PIPE HAS A MINIMUM OF 150mm COMPACTED COVER. CARE SHOULD BE TAKEN THAT THE PROCESS OF COMPACTION DOES NOT DISPLACE THE PIPE FROM ITS CORRECT LINE AND LEVEL. SUBSEQUENT SELECTED FILL CAN BE PLACED AND COMPACTED IN 150mm THICK LAYERS.

33) GENERAL BACKFILL MATERIAL SUITABLE FOR BACKFILL ABOVE SELECTED FILL MATERIAL SHOULD BE FREE FROM BOULDERS, LUMPS OF CONCRETE, TIMBER AND VEGETABLE OR FOREIGN / CONTAMINATED MATTER. GENERAL BACKFILL SHOULD BE PLACED IN LAYERS NOT EXCEEDING 300mm, EACH LAYER BEING WELL COMPACTED. MECHANICAL COMPACTION EQUIPMENT SHOULD NOT BE USED UNTIL THERE IS A MINIMUM OF 450mm COMPACTED COVER OVER THE CROWN OF THE PIPE.

34) PIPES WITH INADEQUATE COVER TO BE FULLY SURROUNDED IN 150mm THICK GRADE 20N/20mm CONCRETE.

35) LEAN-MIX BACKFILL TO TRENCHES IN EXISTING ROAD, WHERE REQUIRED BY THE LOCAL AUTHORITY TO BE GRADE 20N / 20mm CONCRETE.

36) SURFACING TO BE IN ACCORDANCE WITH THE ROAD SPECIFICATION AND, IF APPROPRIATE, LOCAL AUTHORITY REQUIREMENTS.

37) GOOD QUALITY TOPSOIL, 450mm MINIMUM THICK, TO BE PLACED OVER BACKFILL IN ACCORDANCE WITH PARKS DEPARTMENT / LANDSCAPE ARCHITECTS REQUIREMENTS.

NOTE:
BEFORE DRAINAGE WORKS ARE COMMENCED THE CONTRACTOR IS TO ESTABLISH IF DRAINAGE WORKS ARE TO BE TAKEN IN CHARGE BY THE LOCAL AUTHORITY. IF THIS IS THE CASE THE CONTRACTOR IS TO GET APPROVAL FROM THE LOCAL AUTHORITY FOR DETAILS SHOWN ON THIS DRAWING BEFORE COMENCING THE WORK.

ISSUE	DATE	DESCRIPTION	DRN / ORIG	P.E. / P.D.
PL1	29.04.10	ISSUED FOR PLANNING	MR / RS	RS / VB

ISSUE STATUS ☐ PRELIMINARY (P1, P2, P3 etc.,) ☒ PLANNING (PL1, PL2, PL3 etc.,) ☐ TENDER (T1,T2, T3 etc.,) ☐ CONSTRUCTION (0, 1, 2 etc.,)

Barrett Mahony Consulting Engineers, Civil . Structural . Project Management.
E-mail: bmce@bmce.ie Web: www.bmce.ie
London Office: 10 Grey Coat Place, Westminster, London SW1P 1SB, United Kingdom. Tel: (0044) 207 960 6016 Fax: (0044) 207 960 6166
Dublin Office: Sandwith House, 52-54 Lower Sandwith Street, Dublin 2, Ireland. Tel: (01) 677 3200 Fax: (01) 677 3164
Athlone Office: Suite 15B, Inish Carrig Business Centre, Goldenisland, Athlone, Co. Westmeath, Ireland. Tel: (090) 644 9080 Fax: (090) 645 0585
BM barrett mahony

CLIENT: FOM PROPERTIES LTD

PROJECT TITLE: QUEENS ROAD, RICHMOND, SURREY

DRAWING TITLE: DRAINAGE DETAILS Sheet 1 STANDARD MANHOLE & PIPE BEDDING DETAILS

SCALE @ A0	JOB NO.	DRAWING NO.	ISSUE
AS SHOWN	L10.717	110	PL1